Grid Connected Photovoltaic Power Plant Controlled By Using FLC and CR with DC-DC Boost Converter

Mahmoud N. ALI[1], Mohamed F. El-Gohary[2]
M. A. Mohamad.[3], M. A. Abd-Allah[4]
[1,4]Shoubra Faculty of Engineering, Benha University, Cairo, Egypt
[2] New and Renewable Energy Authority (NREA), MOEE, Cairo, Egypt
[3] Solar Energy Dept., National Research Centre, Giza, Egypt

ABSTRACT

This paper proposes to set up 100 KW_p grid connected photovoltaic (PV) power plant. The maximum power point tracking (MPPT) of this PV power plant is controlled by using a proposed combination between the incremental conductance and integral regulator (CR) control and the fuzzy logic control (FLC). This combination is applied to the PV power plant through dc-dc boost converter. The proposed combination collects both advantages of CR and FLC control methods. Whereas the CR control method is simple and widely used for controlling MPPT of PV panels, the FLC provides accurate fast response, high performance and maximum efficiency. Therefore, the combination of these controllers together could improve the MPPT and the PV performance, especially with existing fluctuated solar irradiation and electrical noise. For comparative evaluation, the response of the PV plant with the application of the combined CR and FLC is compared to the responses of the application of each of them separately. The PV plant is simulated using MATLAB and Simulink.

Keywords *- Conductance and Regulator, DC-DC Boost Converter, Fuzzy Logic Control, Maximum Power Point Tracking, PV Array*

I. INTRODUCTION

In recent years, a lot of research works have been presented for using the solar energy as an alternative resource. PV solar energy is produced from the ultra violet light of the sun, which is turned directly into electrical energy by chemical reaction. PV solar energy is one of the most promising renewable energy resources, where it is clean, inexhaustible, silent operation and free to harvest [1]. The main drawback of PV is the low efficiency of energy conversion as compared to other alternative resources. PV is a nonlinear source, where its operation depends on solar irradiation level and ambient temperature [8]. MPPT comes in action of extract the maximum power generated by PV panels. Using CR method for achieving maximum power point of PV is a popular method because it has simple algorithm and it is easy to implement. However, CR method has a problem with the existing of electrical noise that is generated by the nonlinearity of PV panels. The nonlinearity of PV panels is due to the fluctuation of solar irradiation level and ambient temperature degree. These Changes affect PV panels in term of decreasing its efficiency and the electrical power generated [2]. Fig.1 shows the behavior of PV solar cell upon different solar irradiation levels and temperature degrees.

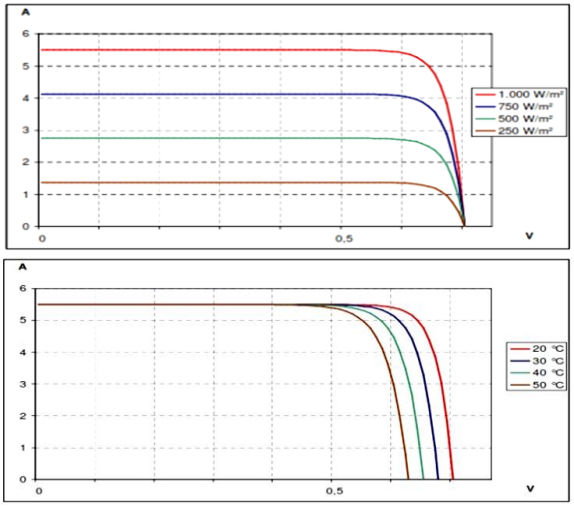

Figure 1. Nonlinearity characteristics of PV solar cell due to effect of solar irradiation and temperature [8]

A new direction in the development of the MPPT of PV is to use the artificial intelligent control algorithms such as FLC and neural network. The advantages of using these techniques are the increasing of stability margin and efficiency. FLC technique is the most popular because of its accuracy, high performance and

maximum efficiency. Most works in this field deal with the mal-operation of PV panels especially at low solar irradiation and high temperature degree [3]. Therefore, this paper proposes a combination between CR control method and FLC with dc-dc boost converter used as a solution for controlling MPPT of PV panels. The proposed combination between CR and FLC will applied on 100 KW_p grid connected PV power plant. This combination can improve time response, efficiency, and stability of the plant especially, with existing of changing in solar irradiation and temperature degree.

This paper is organized as follows: Section II introduces the modeling of PV, and is followed by a discussion on dc-dc boost converter and MPPT algorithms. Section III presents the CR control, the FLC control and the combination of the two controls for MPPT of PV system. Simulation results are presented and discussed in Section IV. Finally Section V concludes the findings.

II. MODELING of PV PLANT SYSTEM

II.1 PV Mathematical Model

PV Solar cell is built with P-N junction that is made from semiconductor material or other Industrial alloys. The Electromagnetic energy of the sun or the solar irradiation can be converted to electricity through this PV solar cell. PV module has sets of PV solar cells that are connected in series and parallel to generate the desired voltage and the required current. PV solar cell is represented as a current source connected with other electrical components. Fig.2 shows the equivalent circuit model for PV solar cell.

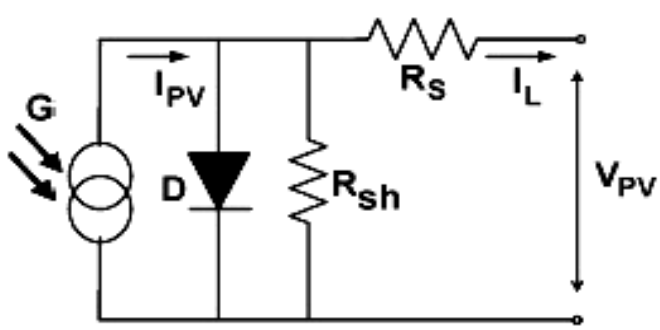

Figure 2. Equivalent Circuit diagram of the PV model [9]

There are various methods to model PV solar cell. The powerful and popular simulation platform to perform PV modeling work is by using MATLAB - Simulink [6]. All the parameters of PV module can be determined by examining the datasheet of the manufacture. The mathematical equations of PV module are presented as the following [7]:

The photo-current (I_{ph}) equation of the PV module is:

$$I_{ph} = \frac{[I_{sh} + K_i(T - 298)]xG}{1000} \qquad (1)$$

Where; I_{sh} is the solar cells short-circuit current (**A**) at standard test conditions (STC), K_i is the solar cell's short current temperature coefficient (**A/ºC**) and G is the solar irradiance level (**W/m²**).

The reverse saturation current (I_{rs}) equation of PV module is:

$$I_{rs} = \frac{I_{sh}}{\left[\exp\left(\frac{qV_{oc}}{N_s kAT}\right) - 1\right]} \qquad (2)$$

Where; k is the Boltzman's constant (**1.38x10^{-23} J/K**), V_{oc} is the open circuit voltage (**V**), N_s is the number of series solar cells in each PV module, A is ideal factor, T is temperature in (**K**) and q is electron charge (**1.6x10^{-19} C**).

The saturation current (I_0) equation of PV module is:

$$I_0 = I_{rs}\left[\frac{T}{T_r}\right]^3 \exp\left[\left(\frac{qE_g}{Ak}\right)\left(\frac{1}{T_r} - \frac{1}{T}\right)\right] \qquad (3)$$

Where; T_r is the reference temperature (**25** ºC) and E_g is the band gap of silicon material (**1.1ev**).

The output current (I_{pv}) equation of this PV module is:

$$I_{pv} = N_p I_{ph} - N_p I_0\left[\exp\left\{\frac{(q(V_{pv} + I_{pv}R_s))}{N_s AkT}\right\} - 1\right] \qquad (4)$$

Where; N_p is the number of parallel solar cells in each PV module, V_{pv} is the output voltage of PV module (**V**); I_{pv} is the output current of PV module (**A**), R_s is the series resistance of solar cells and R_{sh} is the shunt resistance of solar cells. Because of ($R_{sh} >> R_s$), So R_{sh} branch will be neglected.

II.2 DC-DC Boost Converter Model

DC-DC boost converter is used to regulate the output dc voltage of PV panels by stepping it up or down. The regulation is normally achieved by PWM and the switching device is normally MOSFET or IGBT. Fig.3 shows the configuration of the dc-dc boost converter connected with PV panel. MPPT is achieved when the controller algorithm changes and adjusts the duty cycle value (D) of PWM unit that used to generate pulses for the switching device (IGBT) of dc-dc boost converter to control dc voltage of PV panels [14].

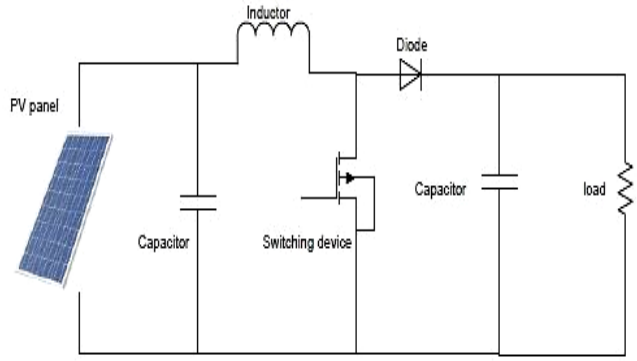

Figure 3. PV panel connected with dc-dc boost converter [14].

III. TYPES of MPPT CONTROL METHOD

III.1 Conductance and Regulator Control Method

The conventional method for controlling MPPT of PV system is called the incremental conductance and integral regulator (CR). The CR control algorithm is the perturbation on the desired maximum power point that is generated by PV as shown by the following relations [10]:

$$\frac{dP}{dv} = 0 \qquad \text{At MPP}$$

$$\frac{dP}{dV} > 0 \qquad \text{Left of MPP}$$

$$\frac{dP}{dV} < 0 \qquad \text{Right of MPP}$$

The disadvantage of using CR method is the continuous perturbation even after reaching the maximum point. CR technique generates the required direct duty cycle values (D) to produce the desired output. The advantage of generating D is improving overshoot and steady state error of the output. However, it is hard to get the desired value of D [11]. When the power and the voltage of PV are increasing, the perturbation will be increased by a step size ΔD to be added to the duty cycle value D to generate next cycle of perturbation and to force the operating point movement towards MPP. The inputs of CR technique are the generated current and voltage of PV panels, where the output of CR is the generated D. The generated value of D is used as an input for PWM unit. This PWM unit is used to generate accurate pulses required for switching device (IGBT) of dc-dc boost converter. Finally, the dc-dc boost converter can control MPPT of PV panels [11]. There are some research works for upgrading CR technique such as the peak current control. These works aims to accelerate the system response, to reduce the amplitude of power oscillations around the maximum power point and to produce lower power losses [12].

III.2 Fuzzy Logic Control Method

Artificial intelligence is a new trend to improve MPPT operation of PV. Fuzzy logic control (FLC) is one of these artificial intelligence controls. FLC uses two inputs are the error (E) and the change in error (CE) at a sample time (k). E and CE are defined by the Equations (5, 6). The output of FLC generates the direct duty cycle value (D). MPPT is achieved when FLC adjusts D value of PWM unit to generate accurate pulses for switching device (IGBT) of dc-dc boost converter [13-15].

$$E(k) = \frac{P(k) - P(k-1)}{V(k) - V(k-1)} \qquad (5)$$

$$CE(k) = E(k) - E(k-1) \qquad (6)$$

FLC is divided into four categories, which include fuzzification, inference, rule based and defuzzification as shown in Fig.4. During the fuzzification block, any numerical input variables are converted to linguistic variables based on the membership functions [3].

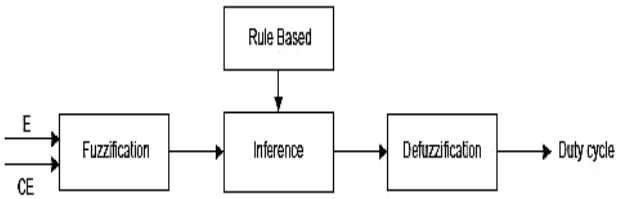

Figure 4. Block diagram of FLC method [5].

After E and CE are calculated, these inputs are converted into linguistic variable, then by looking up in the rule base table of FLC that is used to track MPP of PV.it is easy now to find the required rule where all the rules are based on this relation "If X and Y, Then Z" [4]. To determine the output of FLC, the inference block is used.

There are many methods for inference but the popular one is called Mamdani. The output of FLC is converted back to numerical variable from linguistic variable during defuzzification block. The most common method used for this defuzzification is called centroid. Centroid method has good averaging properties and more accurate results [5]. There are five proposed linguistic variables for making FLC rules that used to determine MPPT of PV panels. These variables are called as follow: N (Negative), ZE (Zero), PS (Positive small), P (Positive), and PB (Positive big). Fig.5 shows FLC membership functions for changing of the output power (ΔP), changing of the output voltage (ΔV) from the PV panels and the generated value of duty cycle (ΔD).

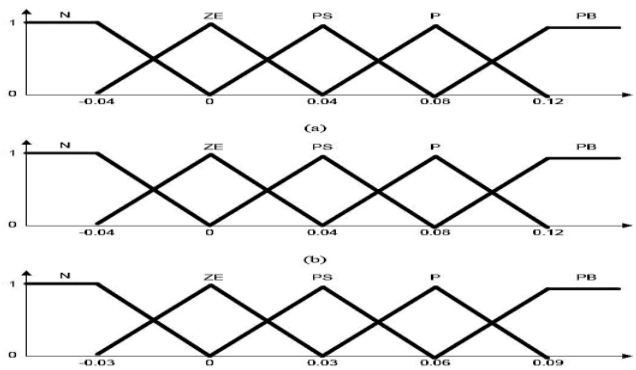

Figure 5. FLC Membership Functions for (a) ΔP, (b) ΔV and (c) ΔD.

After ΔP and ΔV are calculated, they are converted into linguistic variables to use them as input inside FLC. The output is ΔD that is generated by using inference block and FLC rules as shown in Table I. Finally; the defuzzification block operates to convert the generated value of ΔD from linguistic variable to numerical variable again to be used inside PWM unit to be able to generate the input signal for (IGBT) switch of dc-dc boost converter that will find the accurate MPPT of PV.

ΔP\ΔV	N	ZE	PS	P	PB
N	ZE	PS	P	PB	PB
ZE	ZE	ZE	PS	P	PB
PS	N	ZE	ZE	PS	P
P	N	N	ZE	ZE	PS
PB	N	N	N	ZE	ZE

Table I. FLC Rules for producing MPPT of PV panels [14].

III.3 The proposed combination of CR and FLC

In this paper, a proposed combination between CR and FLC methods with dc-dc boost converter for controlling MPPT of PV power plant is presented. The output of this proposed combination generates maximum value of the duty cycle (D). This value of D is used for PWM unit to generate input signal for IGBT switch of dc-dc boost converter. As a result, dc-dc boost converter can control MPPT of PV power plant efficiently.

IV. Simulation Results and Discussions

IV.1 Simulation of 100 KW_p PV Array

In this work, the selected PV module is called Sun Power (SPR 305W). Its type is monocrystalline PV module. Table II shows the detailed parameters of (SPR 305 W) PV module at Standard Testing Condition (STC). These parameters are used to build a PV array by using MATLAB-Simulink as shown in Fig.6. The most significance parameters are the open-circuit voltage and the short-circuit current. The photo current is the short circuit current value of PV panels and the open circuit voltage is determined by assuming the output current is zero. PV panels are categorized to be with good quality and high efficiency if its fill factor almost equal one [8].

Parameter	Value
Maximum Power (**P_{mpp}**)	**305 W**
Maximum Output Voltage (**V_{mpp}**)	**54.7 V**
Maximum Output Current (**I_{mpp}**)	**5.58 A**
Short Circuit Current (**I_{sc}**)	**5.96 A**
Open Circuit Voltage (**V_{oc}**)	**64.2 V**
Temperature Coefficient of (**V_{oc}**)	**- 0.27 %/ºC**
Temperature Coefficient of (**I_{sc}**)	**0.057 %/ºC**
Temperature Coefficient of (**P_m**)	**- 0.38 %/ºC**
Normal Operation Cell Temperature (**NOTC**)	**46 ºC**

Table II. Detailed parameters of SPR (305 W) module at STC

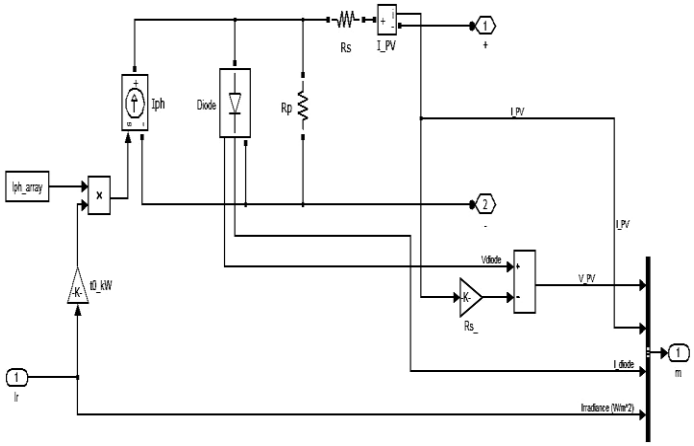

Figure 6. PV Array Structure in Matlab-Simulink.

Fig.7 shows the (I –V) and (P –V) characteristics of the simulated PV Array (SPR 305 W; 5 series modules; 66 parallel strings). As the solar irradiance value increases, the maximum output power is increased because of increasing the output current generated by this PV array.

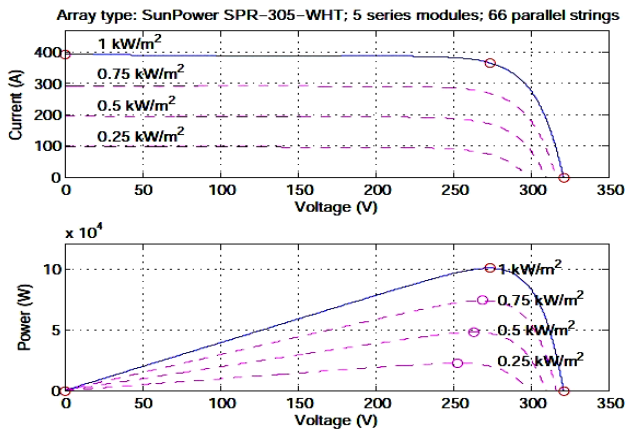

Figure 7. (I –V) & (P –V) curves of 100 KWp PV Array

IV.2 Simulation of Grid Connected PV Plant

The simulated 100 KW_p PV array is connected to the dc-dc boost converter. This converter is used to regulate the output dc power generated by this PV array. The regulated dc power from PV side is fed into special type of inverters is called "on grid inverter" to convert it from dc power to ac power. The output ac voltage is stepped up through the power transformer to feed the grid. Fig.8 shows a schematic diagram, which summarizes the grid connected PV power plant parts. The MPPT of this PV plant is controlled by using different control schemes. The first one uses CR control method, the second uses FLC method and the third uses the combination of CR and FLC methods. To evaluate the proposed combination technique, comparisons between the PV plant response using the combination of CR and FLC and using each of them separately are introduced.

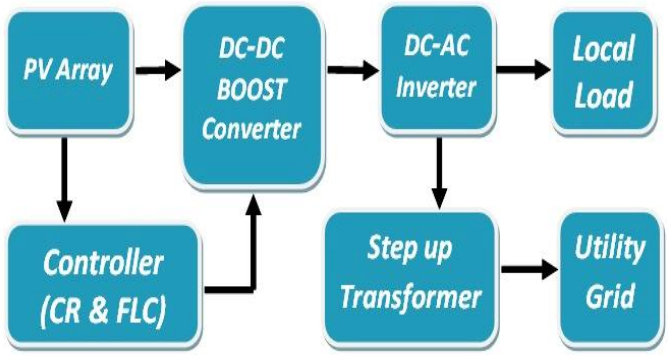

Figure 8. Schematic diagram for grid connected PV plant.

As shown in Fig. 9, 10, and 11 the responses of the output ac power, dc power and dc voltage respectively, reveals that the combination of CR and FLC methods has better response than using each of them separately.

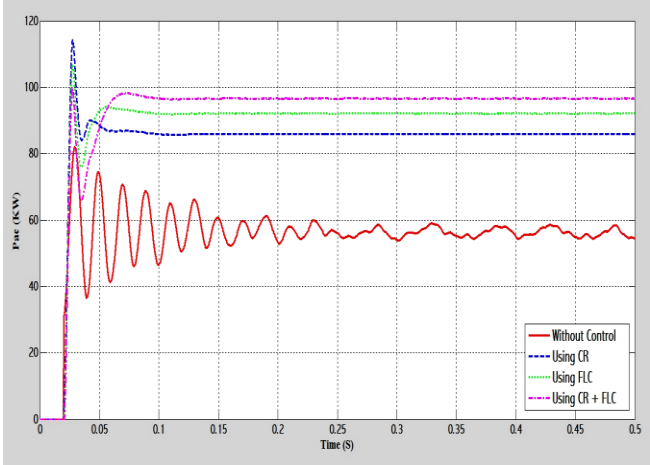

Figure 9. Output ac power of PV plant for each control

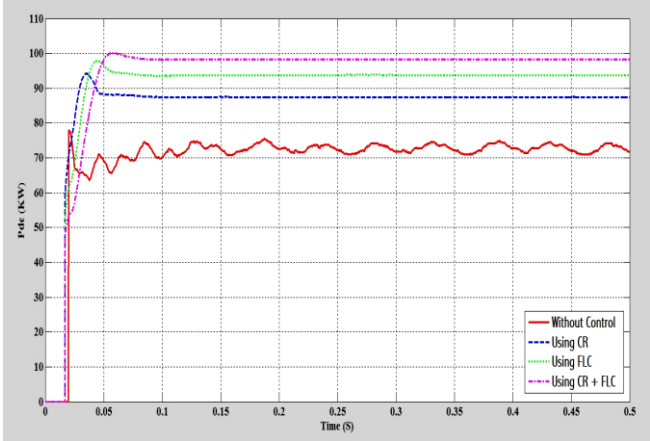

Figure 10. Output dc power of PV plant for each control

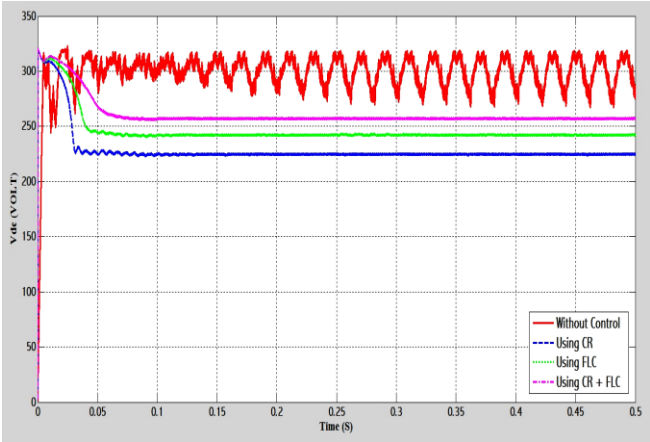

Figure 11. Output dc voltage of PV plant for each control

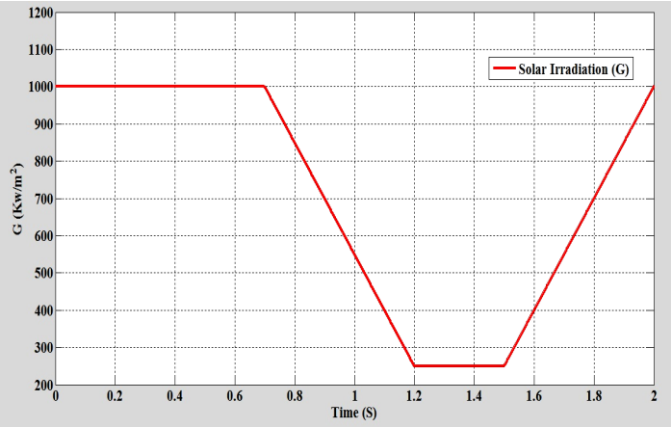

Figure 12. Solar irradiation curve used in PV plant simulation

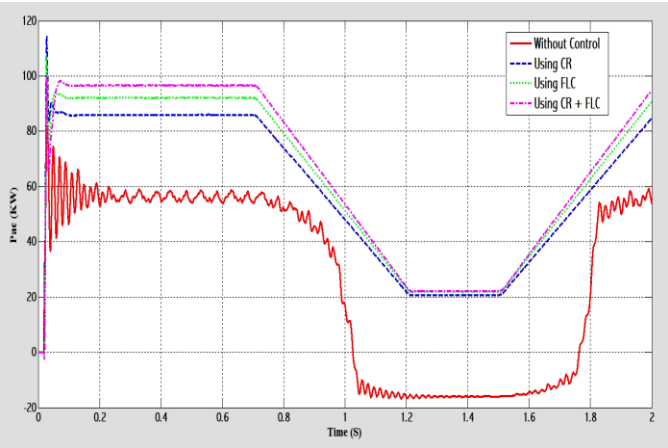

Figure 13. Output ac power of PV plant for each control under solar irradiation level changing from 250 to1000 W/m^2

The behavior of the proposed combination method is investigated when the solar irradiation level is varied. Fig. 12 shows the variation of the solar irradiation level used in the PV plant simulation. Fig.13 shows the output ac power that generated by the simulated PV power plant for each control when varying the solar irradiation level. As shown in Fig.13, the uncontrolled PV plant response reveals high oscillation and unstable performance. Using CR and FLC separately can improve the PV plant response, whereas the combined CR-FLC method provides the highest generated ac power of the PV plant even with low solar irradiation levels.

Another evaluation of the proposed control method is presented through a three phase fault applied on ac side of the PV power plant for the period from (0.2 – 0.22) sec. Fig. 14 shows the response of the PV plant for the three phase fault when the PV plant has no control, CR control method, FLC method and the combined CR-FLC method. It can be shown that the combined CR-FLC method provides the maximum generated ac power and also, it provides the minimum oscillation amplitude for transient periods.

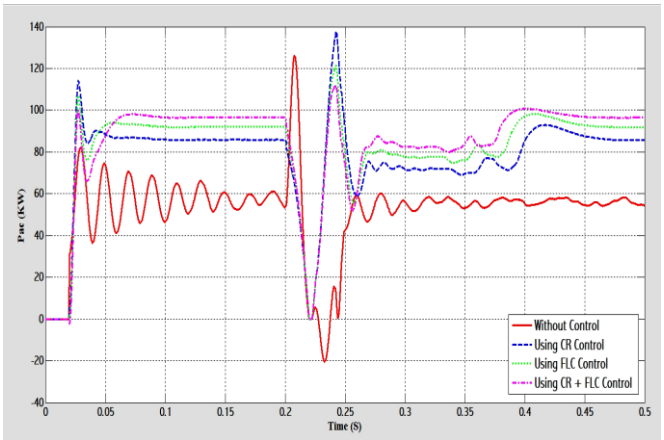

Figure 14. Output ac power of the PV plant for each control at solar irradiation 1000 w/m^2 and fault at period (0.2 – 0.22) sec

V. CONCLUSION

This paper presents a proposed controller for MPPT of grid connected PV systems. This controller consists of three parts, which are: the combination between CR and FLC, the PWM unit and the dc-dc boost converter. The 100 KW_P grid connected PV power plant and the proposed controller for the MPPT are simulated using MATLAB Simulink. The simulation results emphasize that the proposed combination used for controlling MPPT of this PV plant has the best performance over using CR and FLC methods separately. Also for a three phase fault condition, the combined CR-FLC method provides the maximum generated ac power with more stable performance than the other control methods.

VI. REFERENCES

[1] R.Faranda, S.Leva, V.Maugeri, “MPPT techniques for PV systems: energetic and cost comparison”, Power and Energy Society General Meeting - Conversion and Delivery of Electrical Energy in the 21st Century, IEEE, Pittsburgh, PA, 2008.

[2] N. Mutoh, M. Ohno, and T. Inoue, “A method for MPPT Control while Searching for Parameters Corresponding To Weather Conditions For PV Generation Systems”, IEEE Transactions on Industrial Electronics, vol. 53, no. 4, pp. 1055– 1065, Jun. 2006.

[3] Adel Mellit, Soteris A. Kalogirou, "Artificial Intelligence Techniques for Photovoltaic Applications: A Review", Progress in Energy and Combustion Science Elsevier vol. 34, no. 5, pp. 574– 632, 2008.

[4] Sofia Lalouni, Djamila Rekioua, "Modeling and Simulation of a Photovoltaic System Using Fuzzy Logic Controller", IEEE Second International Conference on Developments in eSystems Engineering, Algeria, 2009.

[5] Subiyanto, A Mohamed, M A Hannan, "Maximum Power Point Tracking in Grid Connected PV System Using A Novel Fuzzy Logic Controller", IEEE Student Conference on Research and Development (SCOReD), Malaysia, 16-18 Nov. 2009.

[6] I. H. Altas, A. M. Sharaf, "A Photovoltaic Array Simulation Model for Matlab-Simulink GUI Environment", International Conference on Clean Electrical Power, ICCEP'07, IEEE, 2007.

[7] Natarajan Pandiarajan, Ramabadran Ramaprabha, Ranganath Muthu, "Application of Circuit Model for Photovoltaic Energy Conversion System" Hindawi Publishing Corporation International Journal of Photoenergy, India, 2012.

[8] S.R. Wenham, M.A. Green, M.E. Watt, R. Corkish, "Applied Photovoltaics Handbook Second Edition", Quicksilver Drive, Sterling, VA 20166, USA, 2012.

[9] Hiren Patel, Vivek Agarwal, "MATLAB-Based Modeling to Study the Effects of Partial Shading on PV Array Characteristics", Transactions on Energy Conversion, Vol. 23, No. 1, IEEE, March 2008.

[10] A Safari, S. Mekhilef, "Implementation of Incremental Conductance Method with Direct Control", TENCON 2011 IEEE Region 10 Conference, IEEE, Malaysia, 2011.

[11] Divya Teja Reddy Challa, I. Raghavendar, "Implementation of Incremental Conductance MPPT with Direct Control Method Using Cuk Converter", International Journal of Modern Engineering Research (IJMER), Vol.2, Issue.6, pp-4491-4496, India, 2012

[12] Sang-Hun Lee, Sung-Geun Song, Sung-Jun Park, Chae-Joo Moon, Man-Hyung Lee, "Grid-connected photovoltaic system using current-source inverter", Solar Energy vol. 82, no. 5, pp-411-419, Elsevier, 2008.

[13] M.S. Aït Cheikh, C.L., G.F. Tchoketch Kebir, A. Zerguerras, "Maximum power point tracking using a fuzzy logic control scheme", Renewable Energy Journal, Vol.10, No. 3, p.p.387–395, 2007.

[14] M.A.A.Mohd Zainuri, M.A.Mohd Radzi, Azura Che Soh, N.Abdul Rahim, "Adaptive P&O-Fuzzy Control MPPT for PV Boost Dc-Dc Converter", IEEE International Conference on Power and Energy (PECon), Kota Kinabalu Sabah, Malaysia, 2012.

[15] Chun-Liang Liu, Jing-Hsiao Chen, Yi-Hua Liu, Zong-Zhen Yang, "An Asymmetrical Fuzzy-Logic-Control-Based MPPT Algorithm for Photovoltaic Systems", Energies Vol.7, No. 4, p.p. 2177-2193, 2014.